NAMEEK'S

Scarabeo

5134-49

Components

- Bathroom sink
- Mounting hardware: 2 bolts (8 mm), 2 nuts, 2 washers, 2 wall anchors, and 2 sleeves

Nameek's One-Year Limited Warranty

See website for warranty information details.

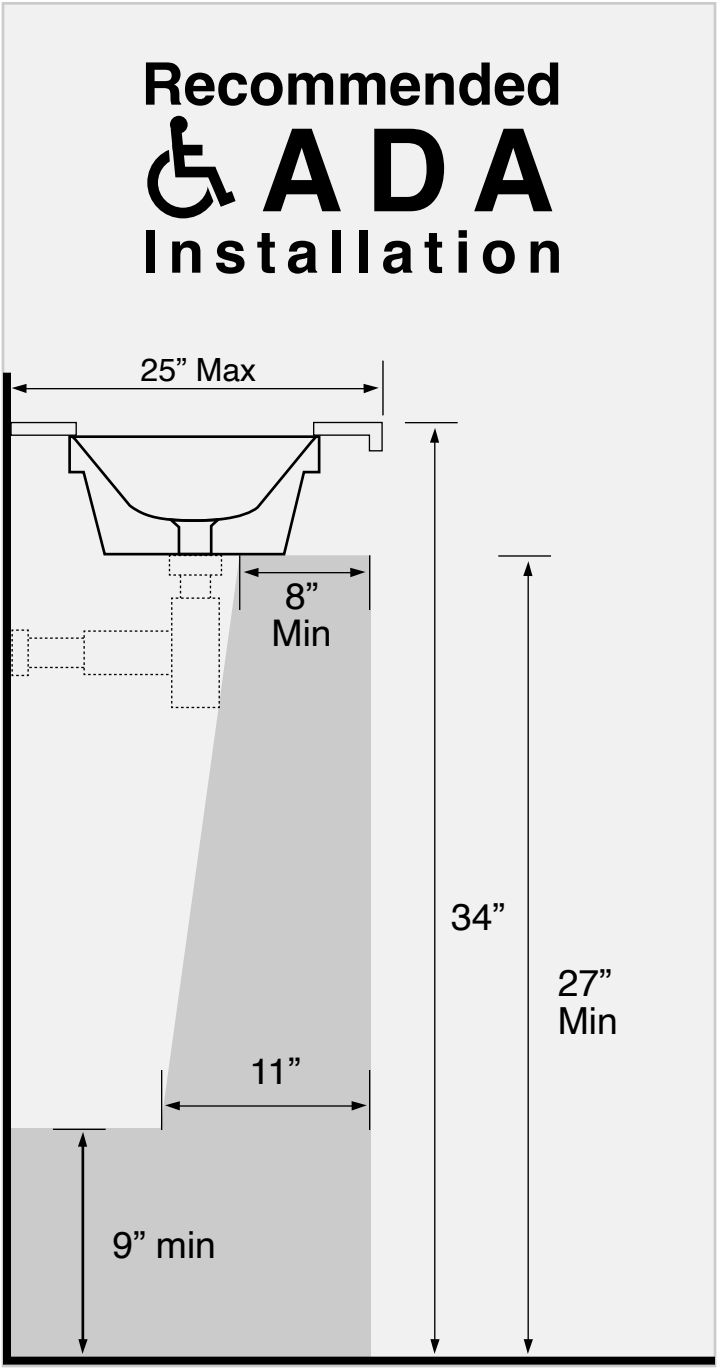

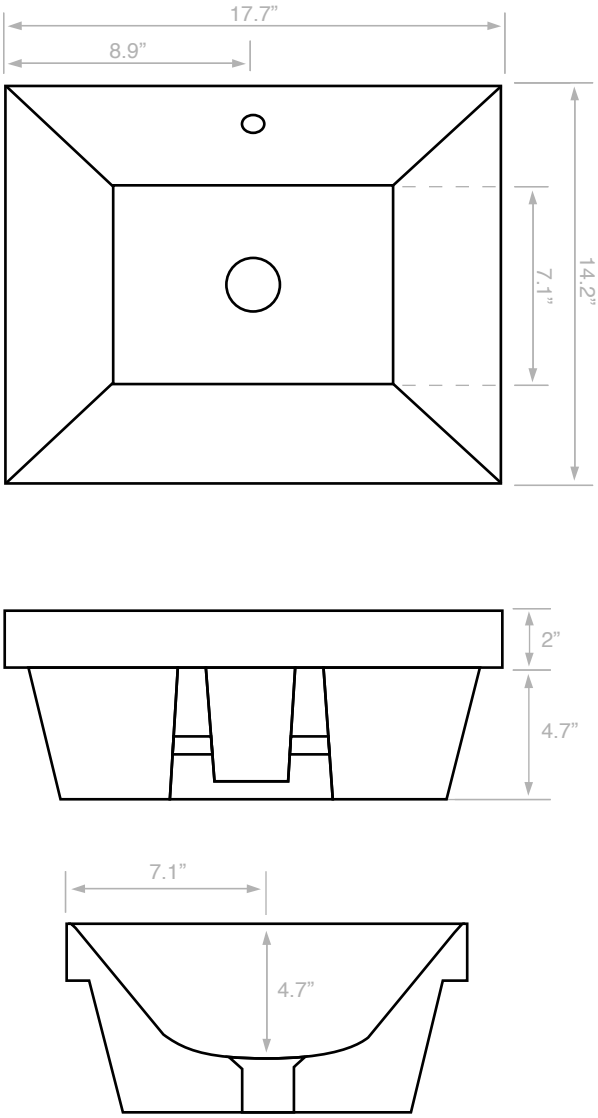

Notes

Install this product according to the installation instructions. ADA compliant when installed to the specific requirements of these regulations.